LED Post Top Light

HIGH LIGHT · DURABLE · SAVE COST

BB-LD-XXXW-AR-D4

1.Ultra-Bright:

Utilizing SMD 3030 LED chips, it delivers 130 lumens per watt, with a total lumen output ranging from 3250 to 19500LM. Compared to other high-pressure sodium lamps and high-intensity discharge lamps, it boasts a higher light utilization rate, produces a more uniform light distribution, and offers an impressive lifespan of up to 30,000 hours. It is eco-friendly and energy-efficient.

2.Easy Installation:

Simply match the column light and transformer mounting base with most adapters, and you can proceed with arm installation. Additionally, a variety of installation methods are available, including two-pole bracket, straight bracket, triangular bracket, two-pole single head + wall mounting, two-pole double head + wall mounting, two-pole double head + square pole, two-pole double head + round pole, straight single head + wall mounting, straight double head + wall mounting, straight double head + square pole, and straight double head + round pole.

3.High Quality:

Die-cast aluminum metal body, impact-resistant, with a waterproof rating of IP65 for outdoor wet locations. The surface is covered with a protective powder coating that does not fade. It is corrosion-resistant and heat-resistant. In addition, the polycarbonate lens and LED board can be easily unscrewed. The top is made of dense high-quality aluminum plate, providing better heat dissipation and longer service life.

4.3-Year Warranty:

If you encounter any issues, have questions about LED technology, or need design advice, please feel free to contact us.Application scope: Suitable for commercial or industrial lighting, homes, gardens, garages, courtyards, warehouses, shops, streets, paths, porches, and other places. It is a bright and durable high-quality lighting fixture.

- ☑ IP 65 Dust free and waterproof,Anti-shock, Anti-moisture,Die-casting housing anti-corrosion.
- ☑ 120 degree Directly down lighting.
- ☑ Dusk to Down photocell sensor.
- ☑ AC100~277V input voltage.
- ☑ High quality LED SMD 3030 chips.
- ☑ 30,000hrs lifespan,3 years warranty.

Product Picture

Single Head + Wall-Mounted

Single-Head Light Control + 5m Round Pole

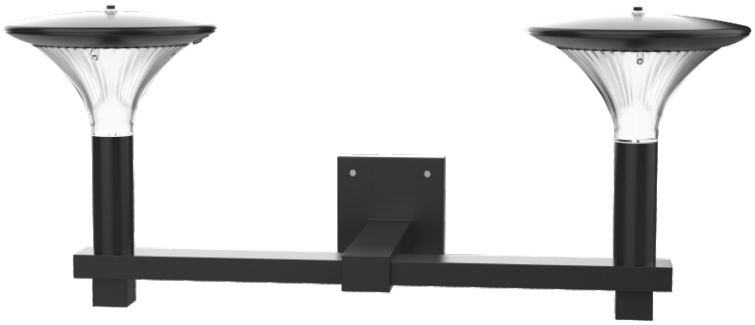

Double-Headed + Wall-Mounted

Double-Headed + Square Rod

Double-Headed + Round Rod

Single Head

Single-Head Optical Control

DATA SHEET(Single Lamp)		
Power	25W/30W/50W/75W	75W/100W/120W/150W
Model	BB-LD-(25~75W)-AR-D4	BB-LD-(75~150W)-AR-D4
Luminous Flux	25W=3250LM;30W=3900LM; 50W=6500LM;75W=9750LM	75W=9750LM;100W=13000LM; 120W=15600LM;150W=19500LM
Install	Triangular Bracket,Wall-Mounted,Square Rod, Round Rod,Etc	
Luminous Efficacy	130LM/W	
Light Source	SMD 3030 LED	
Operation Temp	- 40°C to + 45°C	
Color	Black	
Cover	Frosted Cover	
CCT	3000K/4000K/5000K All In One, Options:4000K/5000K/5700K	
CRI	70+	
Life Span	30,000 Hours	
Voltage	100-277VAC/50-60HZ	
Driver	UL listed power supply	
Dimming	Yes	
With Sensor	Daily Sensor	
Beam Angle	120°	
PF	＞0.9	
IP	65	
Warranty	3 Years	

Dimension

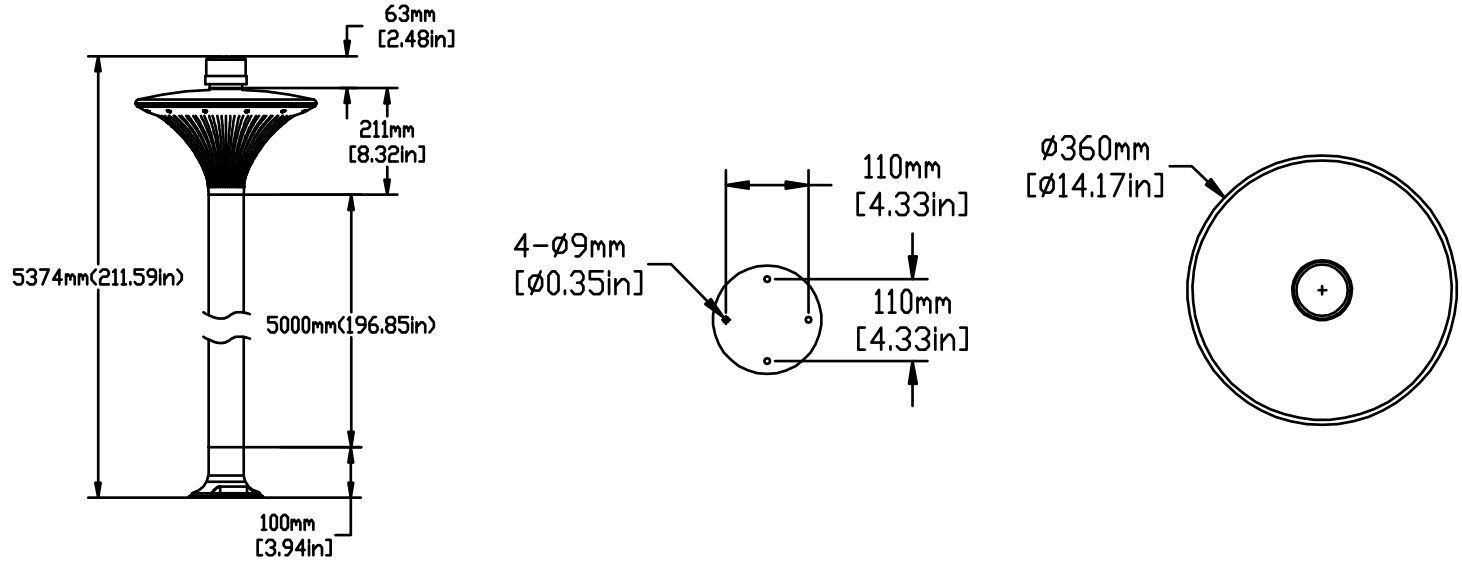

Single-Head Light Control + 5m Round Pole

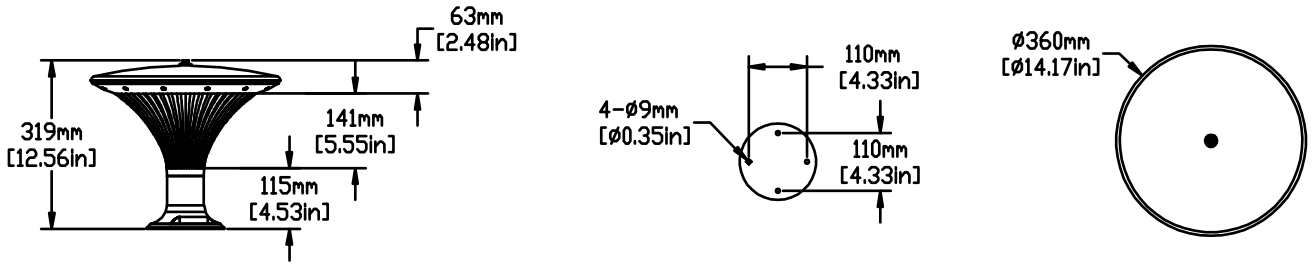

Single Head

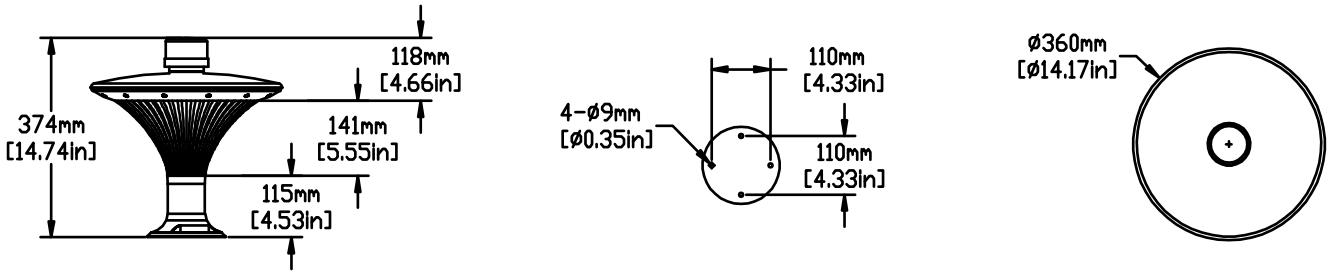

Single-Head Optical Control

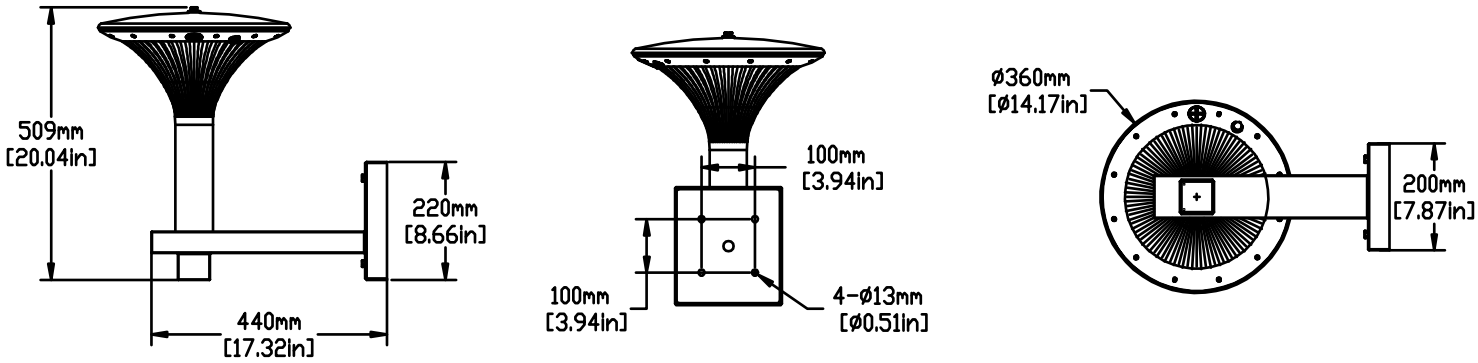

Single Head + Wall-Mounted

Dimension

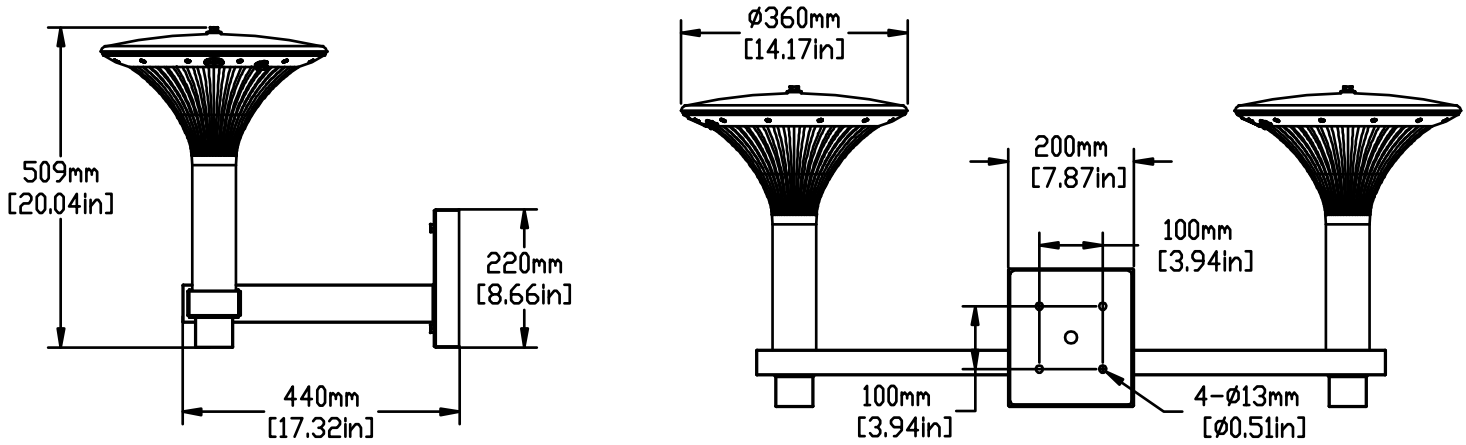

Double-Headed + Wall-Mounted

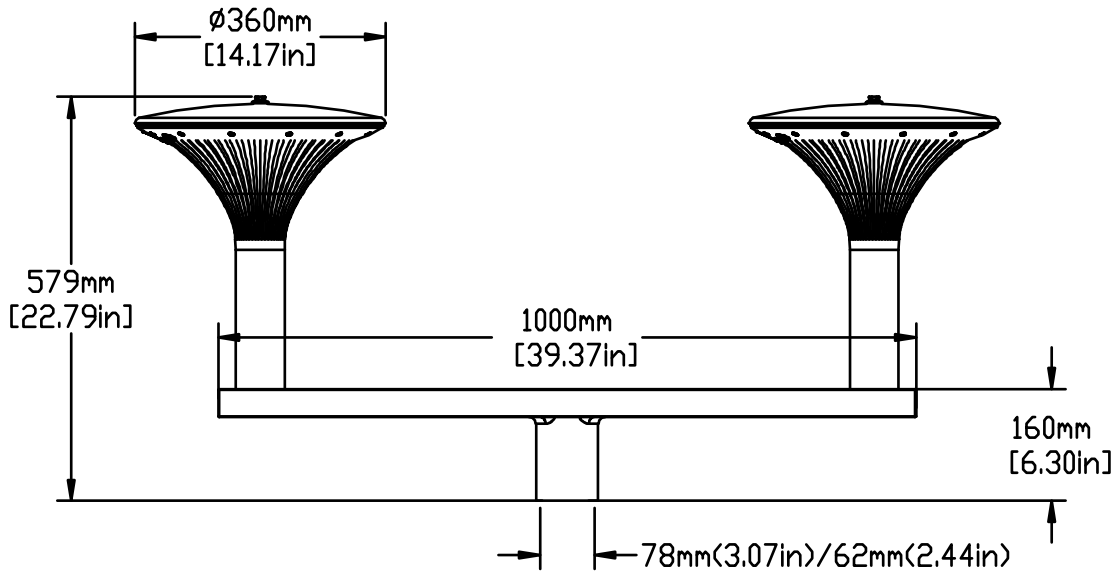

Double-Headed + Round Rod

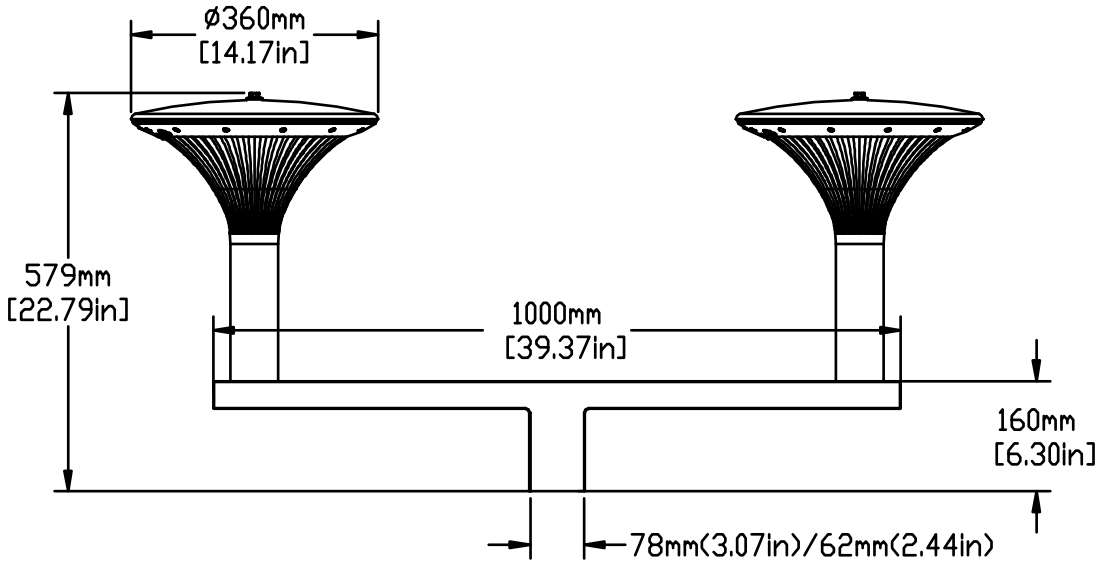

Double-Headed + Square Rod

Power/CCT Adjustable All In One

Adjustable Power,Adjustable Color Temperature Controller Instructions(Manual Operation)

◎ Pull out the controller cover. Please refer to Figure 1.

◎ Adjust the power in zone A and adjust the color temperature in zone B. The factory default power is 75W and the color temperature is 5000K. See picture 2.

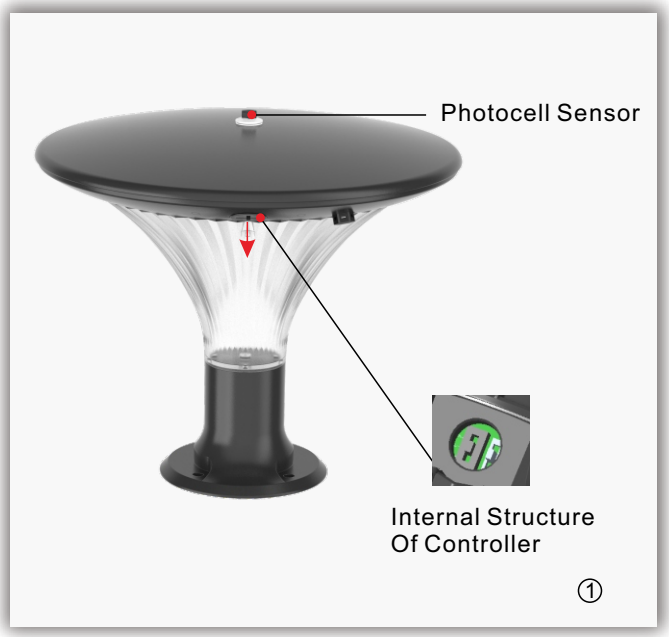

Instructions for adjusting the power (zone A):

25W/30W/50W/75W	75W/100W/120W/150W
25W: A1 to ON, A2 to ON. 30W: A1 to OFF, A2 to ON,picture 4. 50W: A1 to ON, A2 to OFF, picture 3. 75W: A1 to OFF, A2 to OFF.	75W: A1 to ON. A2 to ON. 100W: A1 to ON. A2 to OFF. 120W: A1 to OFF. A2 to ON. 150W: A1 to OFF, A2 to OFF.

Instructions for adjusting the color temperature (zone B):

3 gears adjustment: B3=3000K, B2=4000K, B1=5000K. The factory default is 5000K (B1). When adjusting the color temperature, just pull the button to the corresponding position.

How to use photocell sensor:

Open the photocell sensor function: remove the photocell sensor cover.

Close the photocell sensor: close the photocell sensor cover.

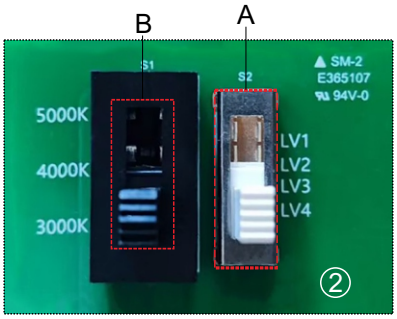

Power	25W/30W/50W/75W	75W/100W/120W/150W
Model	BB-LD-(25~75W)AR-D4	BB-LD-(75~150W)AR-D4
Luminous Efficacy	130W/lm	
CCT	3000K/4000K/5000K All in one, Options:4000K/5000K/5700K	
IP	65	
Warranty	3 Years	

Installation

- Installation guide

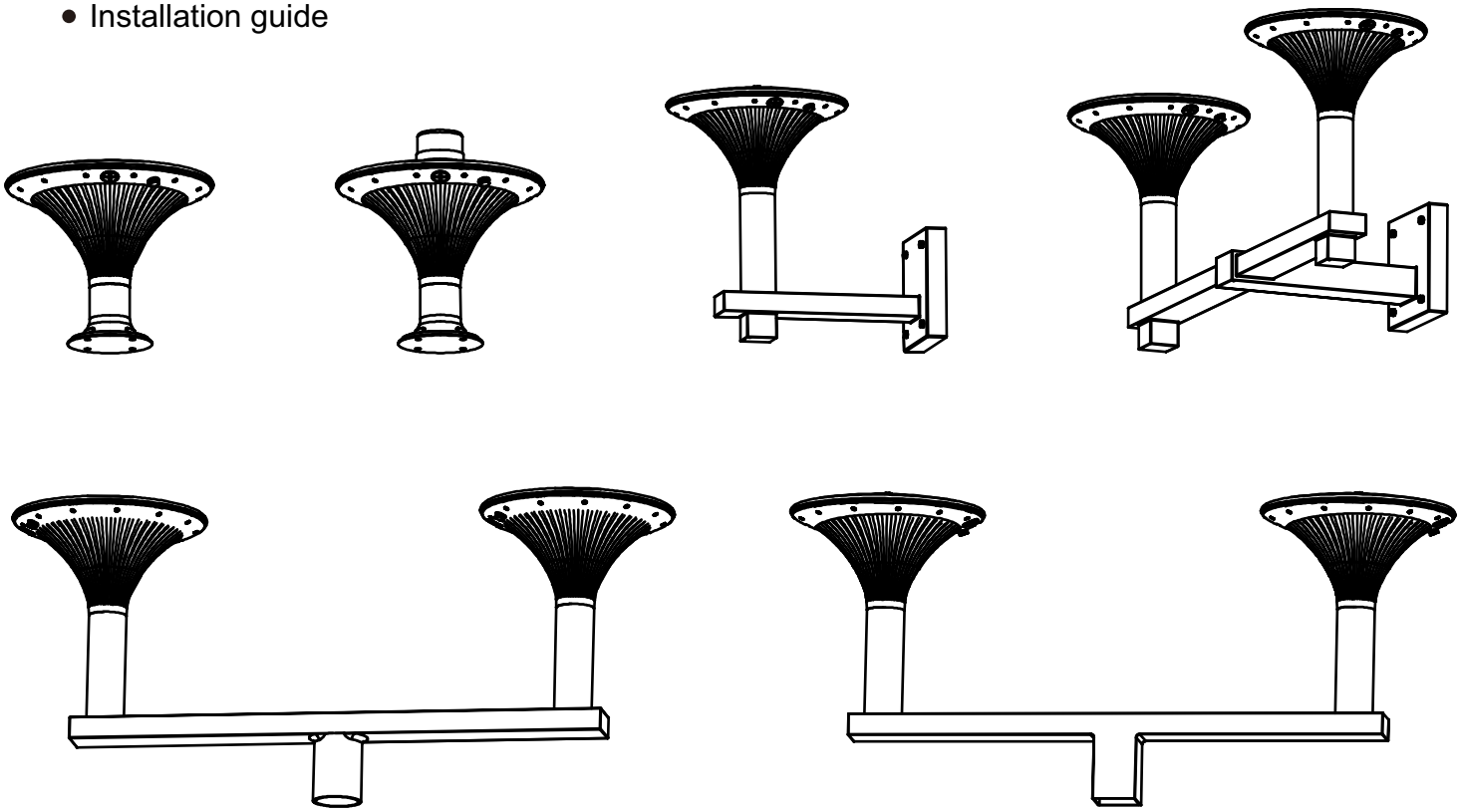

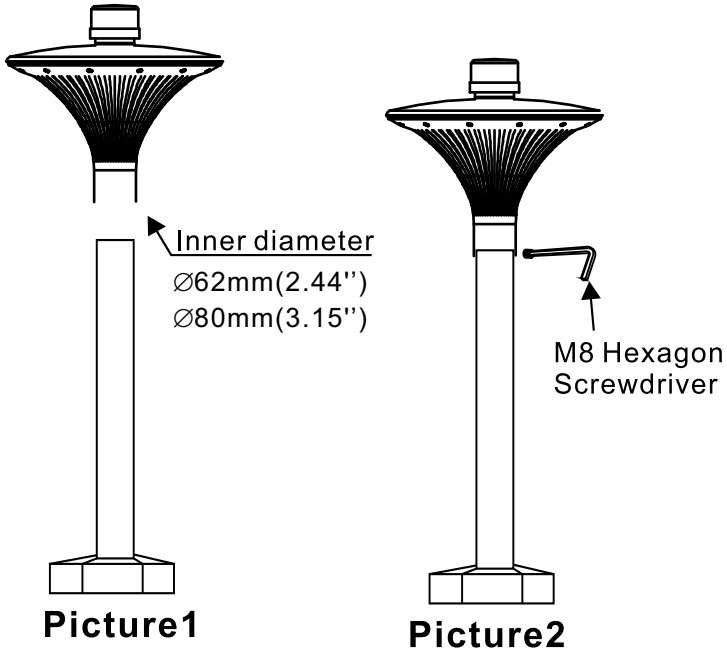

Step1:Turn off the power before installation.

Step2: Secure the Tenon Pole Adaptor and pole with 6 screws (Hexagon socket screws M8*20).

Step3: Check that all screws are not loose ,and then complete the pole mounting

Please contact sales staff if you need help during installation

Product Details

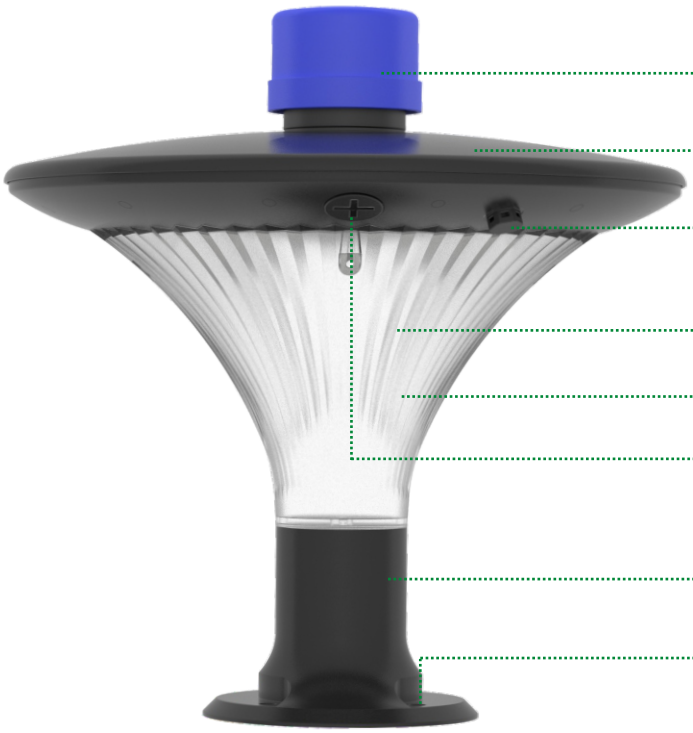

Surface Of Intensity Distribution

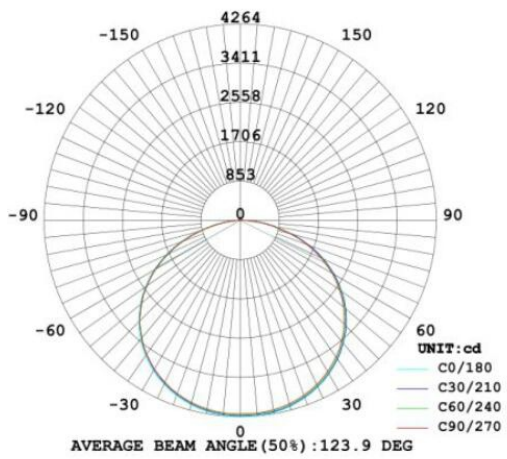

120°

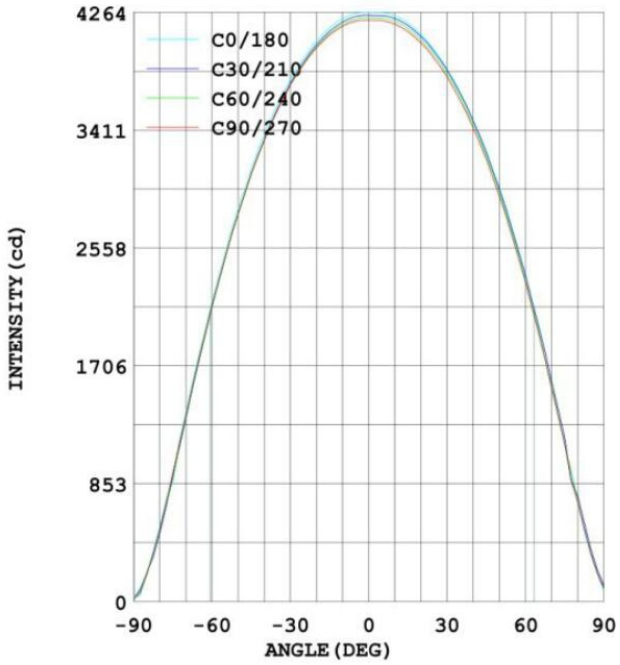

Optics

Tech.Support:

Tell us the place/L,W and usage,we have an engineer team to respond the DIALUX for lights quantity and effects, IES fils are available upon request.

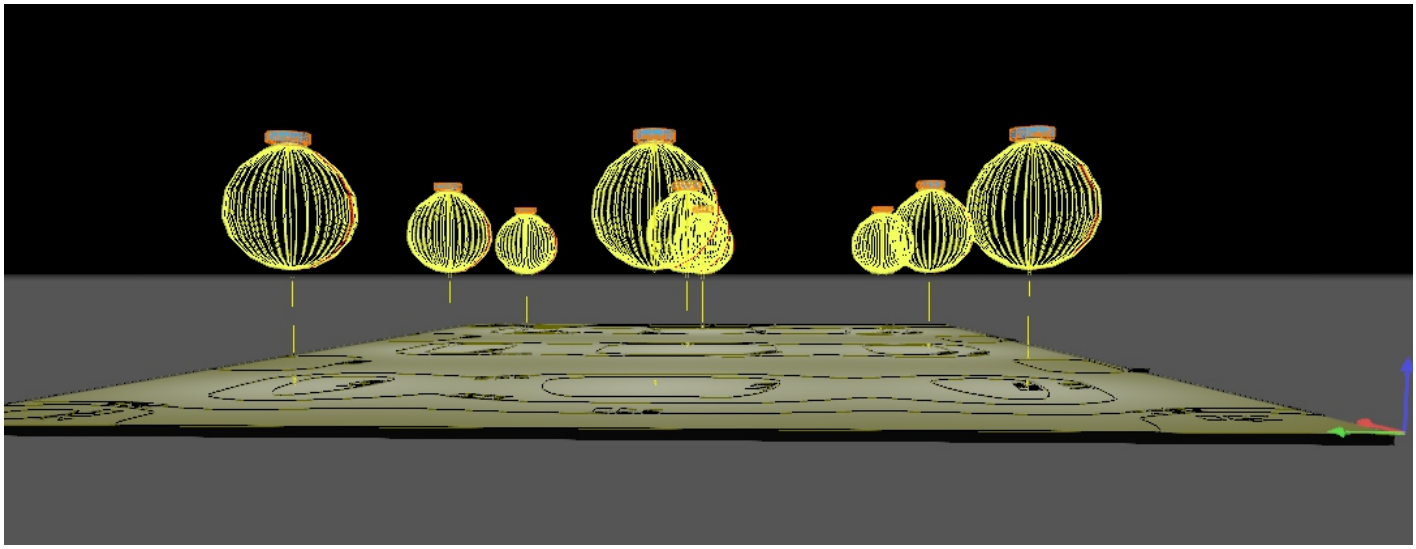

Application case

- Area roadway/roadway lighting.
- Parking areas lighting.
- Airports lighting.
- Streetscapes lighting.
- Campuses lighting.

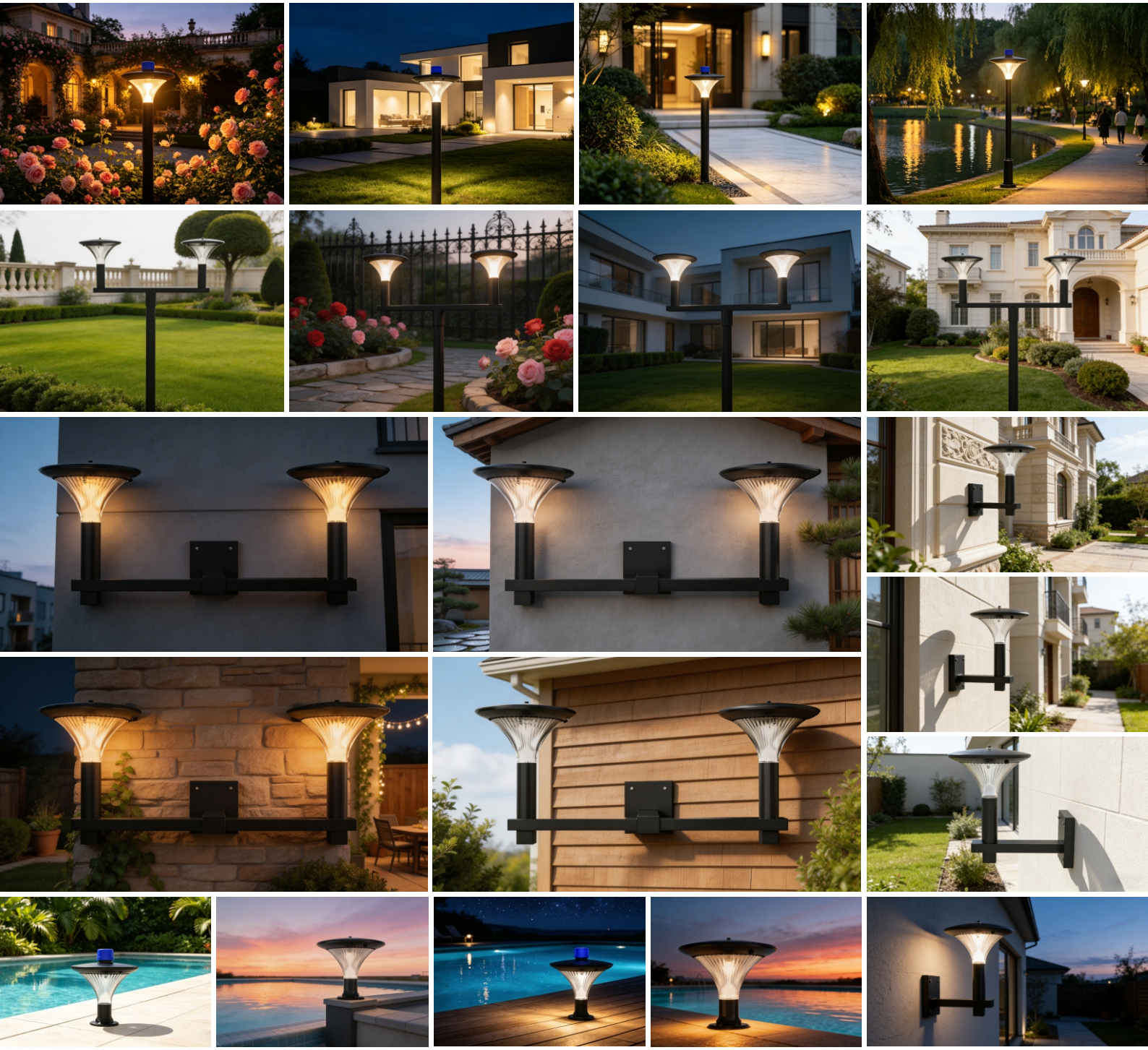

Specifications are subject to change without notice.

Updated date: 2026-04-11